California Polytechnic State University Pomona
DEPARTMENT OF ELECTRICAL & COMPUTER ENGINEERING

Circuit Analysis 2 Laboratory

ECE 2101L-03
Report #10

LAB 10 – Resonance Circuits I

Prepared by
Kevyn Santos & Kaung Nyi Naing

Presented to
Sasoun Torousian

April 11, 2024

Introduction:

In this lab, we will be analyzing the voltage relationships in a series resonant circuit. More specifically, how we get our resonant frequency and quality factor from our resistor, inductor, and capacitor values. It is important to understand that at resonant frequency our circuit will be purely resistive and our current will be at its maximum value. Below resonant frequency our circuit is capacitive, and above resonant frequency, it will be inductive. To move forward in this experiment our quality factor, Q, equations will be very important.

Parts List: (1) 10 nF (1) 10 mH (1) 47 Ω (1) 470 Ω

Lab:

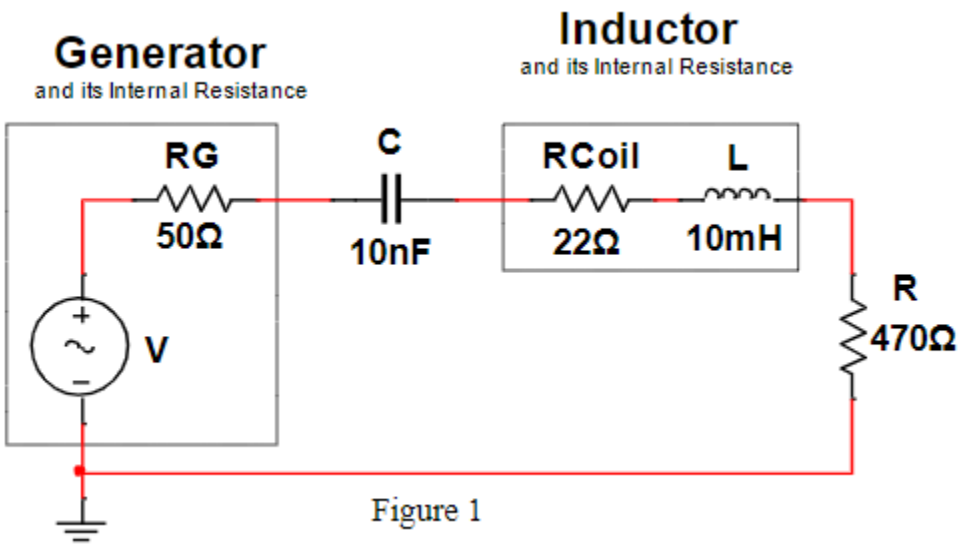

Figure 1

Calculations

Low Q Circuit : R = 470 Ω, C = 10 nF, L = 10 mH, R_{Coil} = 22 Ω (60 Ohms Measured), E = 1 $V_{p\text{-}p}$

f_r =	$\frac{1}{2\pi\sqrt{LC}} = \frac{1}{2\pi\sqrt{10m * 10n}}$ = 15915.4943 Hz
X_C =	$\frac{1}{2\pi fC} = \frac{1}{2\pi*15915*10n}$ = 1000 Ohms
X_L =	$2\pi*f*L$ = 2π*15915*10m = 1000 Ohms
$R_T = R_G + R_{Coil} + R$=	50+22+470 = 542 Ohms

Q =	$\frac{X}{R} = \frac{1000}{542} = 1.845$
BW =	$\frac{fr}{Q} = \frac{15915}{1.845} = 8626.2842$ Hz
f_1 =	$\frac{\omega 1}{2\pi} = \frac{76506.99783}{2\pi} = 11602.395$ Hz
f_2 =	$\frac{\omega 2}{2\pi} = \frac{130706.9978}{2\pi} = 20228.593$ Hz

High Q Circuit : R = 47 Ω, C = 10 nF, L = 10 mH, R_{Coil} = 22 Ω (60 Ohms Measured), E = 1 $V_{p\text{-}p}$

f_r =	$\frac{1}{2\pi\sqrt{LC}} = \frac{1}{2\pi\sqrt{10m * 10n}} = 15915.4943$ Hz
X_C =	$\frac{1}{2\pi fC} = \frac{1}{2\pi*15915*10n} = 1000$ Ohms
X_L =	$2\pi*f*L = 2\pi*15915*10m = 1000$ Ohms
R_T =	50+22+47 = 119 Ohms
Q =	$\frac{X}{R} = \frac{1000}{119} = 8.40336$
BW =	$\frac{fr}{Q} = \frac{15915}{8.40336} = 1893.9438$ Hz
f_1 =	$\frac{\omega 1}{2\pi} = \frac{94226.85611}{2\pi} = 14968.522$ Hz
f_2 =	$\frac{\omega 2}{2\pi} = \frac{106126.8561}{2\pi} = 16862.466$ Hz

Data Tables: Low Q Circuit

Note: We used Rcoil as 60 Ohms for the theory calculations here.

	Theory	Experimental	% Deviation

f_r	15915.49	16375.495	-2.89%
Q	1.7241	1.5898	7.78%
f_1	11300.00	11669.05	-3.26%
f_2	20530.99	21969.02	-7.004%

Table 1

Frequency	V_R	V_C	V_L
f_r= 16375.49	0.768	1.312	1.339
f_1= 11669.05	0.543	1.405	0.932
f_2= 21969.02	0.543	0.665	1.22
1 kHz	0.0318	1.005	0.008
5 kHz	0.1668	1.074	0.107
8 kHz	0.2952	1.182	0.288
12 kHz	0.534	1.362	0.735
20 kHz	0.654	0.975	1.46
30 kHz	0.359	0.388	1.25
50 kHz	0.185	0.131	1.088
100 kHz	0.0849	0.035	1.021

Table 2

Data Tables: High Q Circuit

Note: We used Rcoil as 60 Ohms for the theory calculations here.

	Theory	Experimental	% Deviation
f_r	15915.49	16569.05	-4.11%
Q	6.3694	5.7994	8.94
f_1	14666.13	14992.64	-2.23%
f_2	17164.86	17849.27	-3.99%

Table 3

Frequency	V_R	Vc	V_L
f_r= 16569.05	0.578	3.65	1.18
f_1= 14992.64	0.408	2.09	0.972
f_2= 17849.27	0.408	1.22	1.2
1 kHz	0.018	1.07	0.082
5 kHz	0.1	1.09	0.411
8 kHz	0.182	1.26	0.653
12 kHz	0.361	1.68	0.945
20 kHz	0.489	1.3	1.226
30 kHz	0.233	0.423	1.18
50 kHz	0.115	0.125	1.08
100 kHz	0.053	0.03	1.002

Table 4

Simulations:

Low Q Circuit :

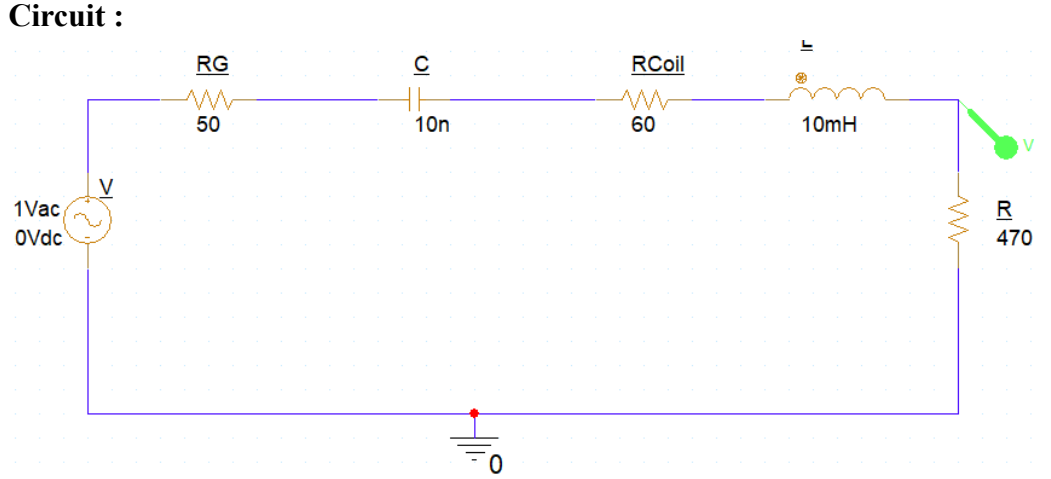

Figure 2: Low Q Circuit with R = 470 Ohms

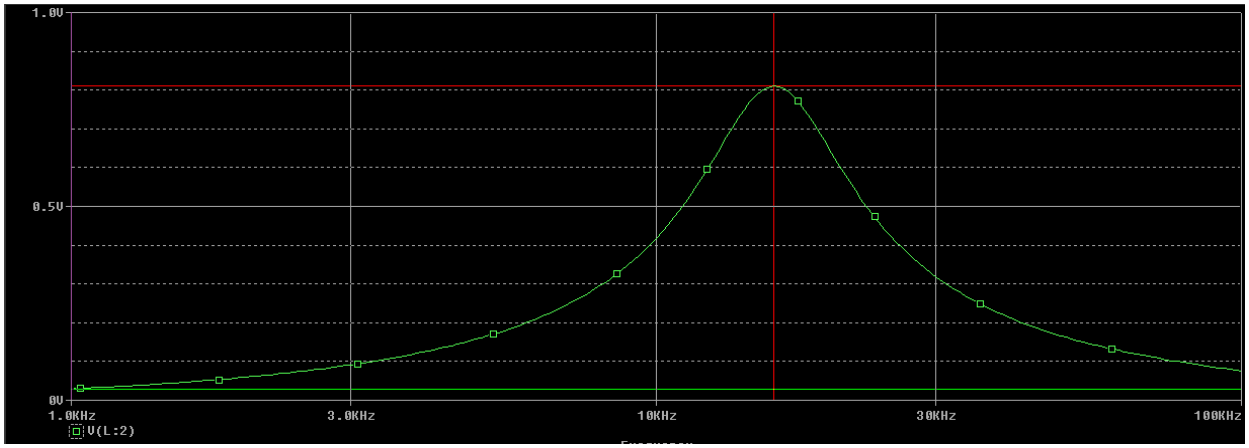

Figure 3: AC Sweep Voltage Curve Showing Max (red) and Min (green)

Probe Cursor

Trace Color	Trace Name	Y1	Y2	Y1 - Y2	Y1(Cursor1) - Y2(Cursor2)		780.632m		
	X Values	15.849K	1.0000K	14.849K	Y1 - Y1(Cursor1)	Y2 - Y2(Cursor2)	Max Y	Min Y	Avg Y
CURSOR 1,2	V(L:2)	810.260m	29.628m	780.632m	0.000	0.000	810.260m	29.628m	419.944m

Figure 4: Cursor Results Showing Max (Y1) and Min (Y2)

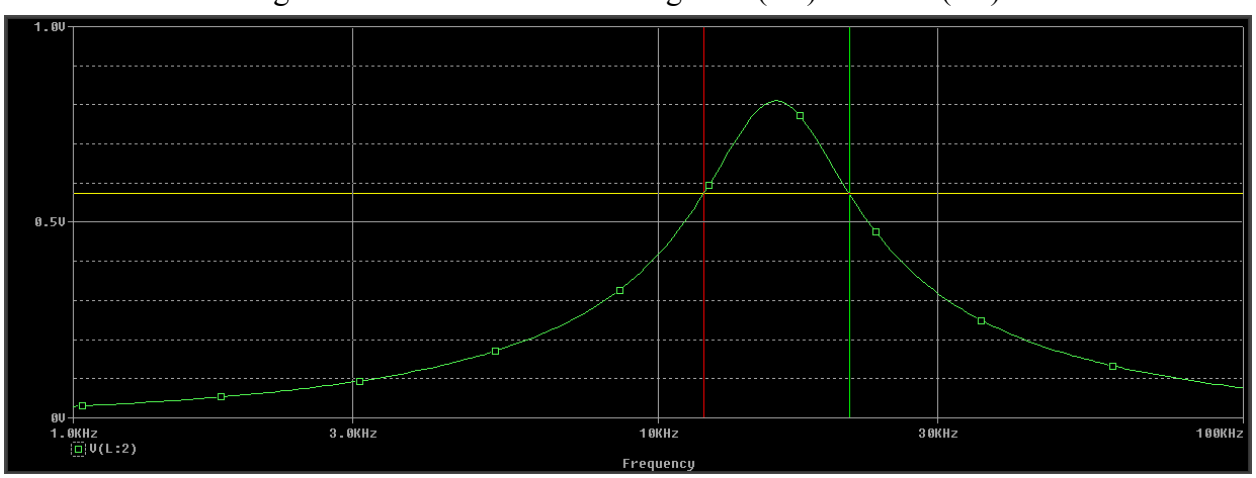

Figure 5: AC Sweep Voltage Curve Showing f1 (red) and f2 (green)

Trace Color	Trace Name	Y1	Y2	Y1 - Y2	Y1(Cursor1) - Y2(Cursor2)		0.000		
	X Values	11.954K	21.193K	-9.2394K	Y1 - Y1(Cursor1)	Y2 - Y2(Cursor2)	Max Y	Min Y	Avg Y
CURSOR 1,2	V(L:2)	572.854m	572.854m	0.000	0.000	0.000	572.854m	572.854m	572.854m

Figure 6: Cursor Results Showing f1 (Y1) and f2 (Y2)

High Q Circuit :

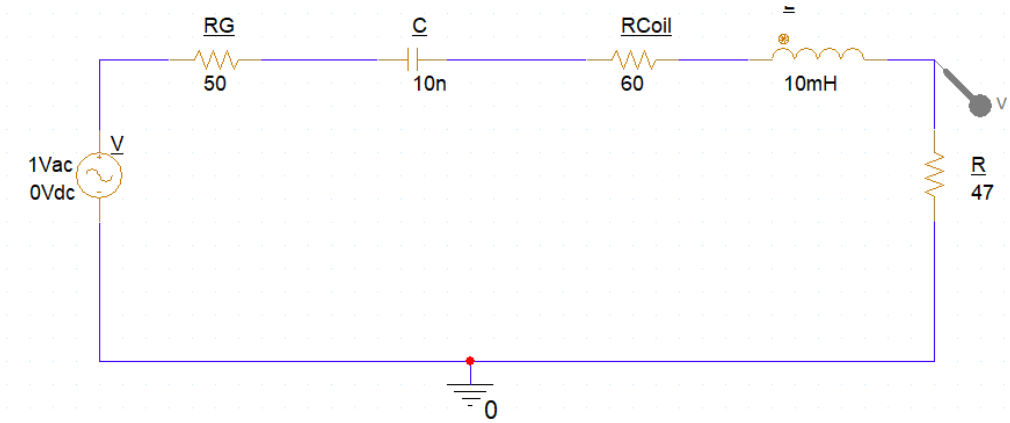

Figure 7: Low Q Circuit with R = 470 Ohms

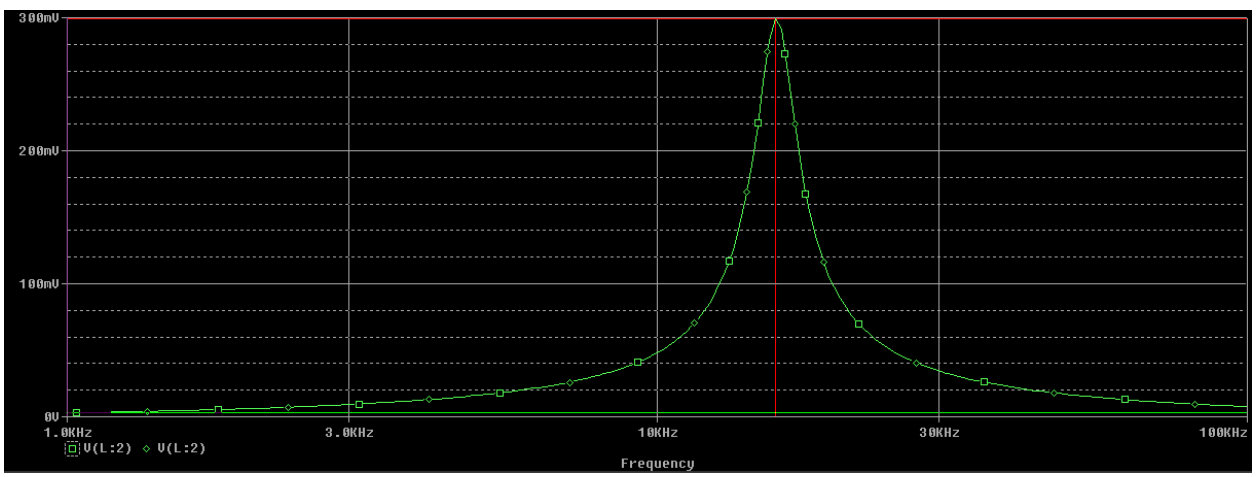

Figure 8: AC Sweep Voltage Curve Showing Max (red) and Min (green)

	Trace Color	Trace Name	Y1	Y2	Y1 - Y2		Y1(Cursor1) - Y2(Cursor2)		295.973m		
		X Values	15.849K	1.0000K	14.849K		Y1 - Y1(Cursor1)	Y2 - Y2(Cursor2)	Max Y	Min Y	Avg Y
	CURSOR 1,2	V(L:2)	298.937m	2.9647m	295.973m		0.000	0.000	298.937m	2.9647m	150.951m
		V(L:2)	298.937m	3.0343m	295.903m		-196.400p	69.615u	298.937m	3.0343m	150.986m

Figure 9: Cursor Results Showing Max (Y1) and Min (Y2)

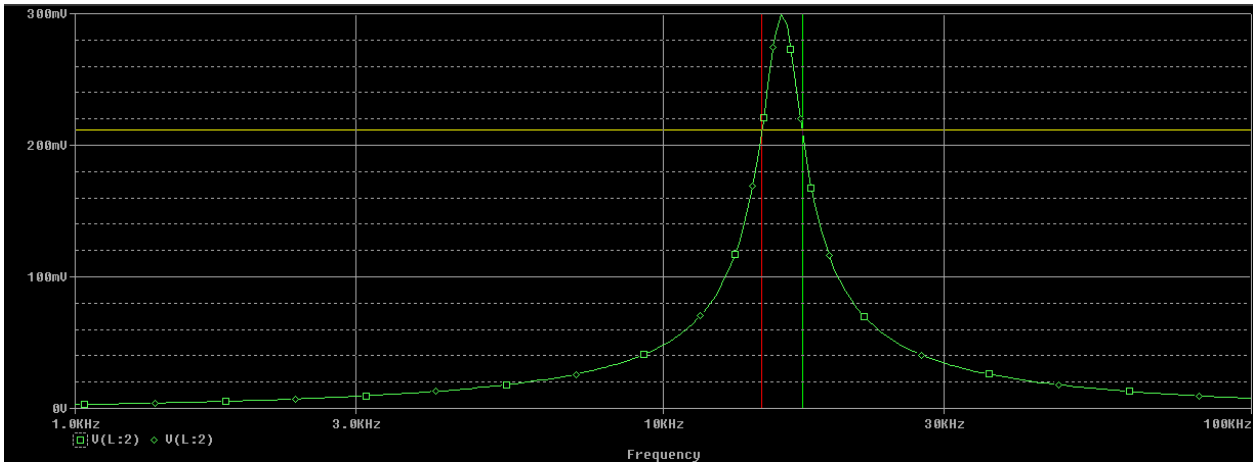

Figure 10: AC Sweep Voltage Curve Showing f1 (red) and f2 (green)

	Trace Color	Trace Name	Y1	Y2	Y1 - Y2		Y1(Cursor1) - Y2(Cursor2)		0.000		
		X Values	14.707K	17.226K	-2.5184K		Y1 - Y1(Cursor1)	Y2 - Y2(Cursor2)	Max Y	Min Y	Avg Y
	CURSOR 1,2	V(L:2)	211.349m	211.349m	0.000		0.000	0.000	211.349m	211.349m	211.349m
		V(L:2)	210.853m	214.729m	-3.8760m		-495.746u	3.3802m	214.729m	210.853m	212.791m

Figure 11: Cursor Results Showing f1 (Y1) and f2 (Y2)

PCB Design:

Low Q Circuit :

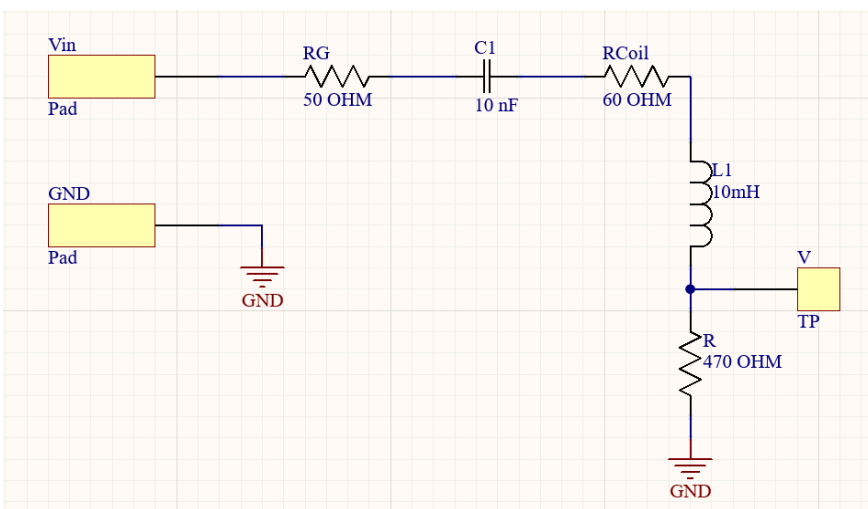

Figure 12: Schematic Low Q Circuit with R = 470 Ohms

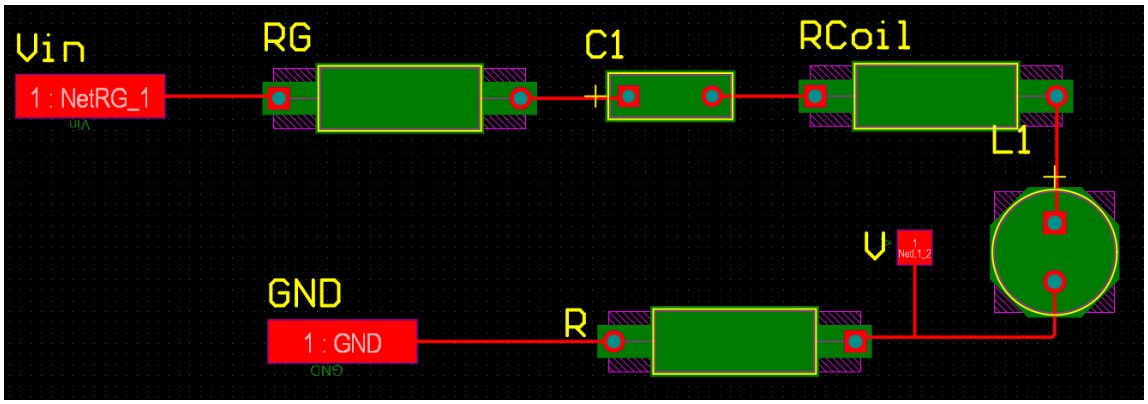

Figure 13: PCB Low Q Circuit with R = 470 Ohms

High Q Circuit :

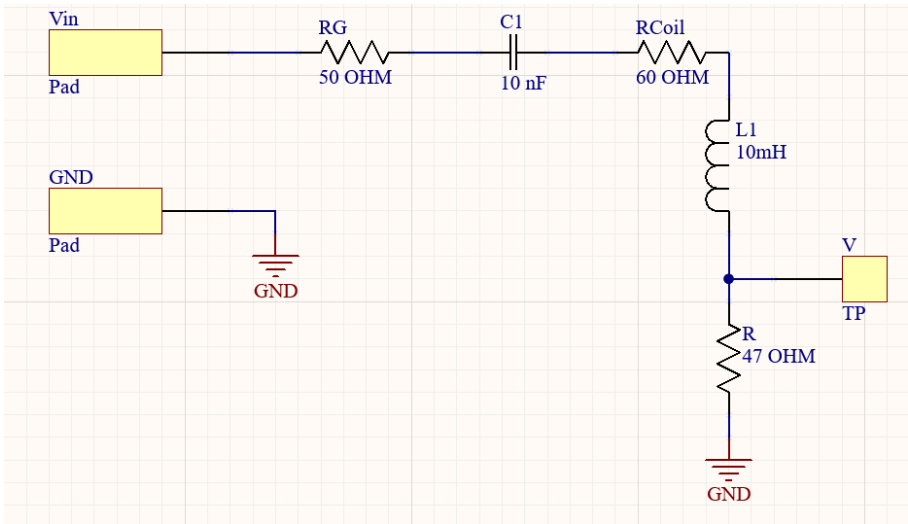

Figure 14: Schematic High Q Circuit with R = 47 Ohms

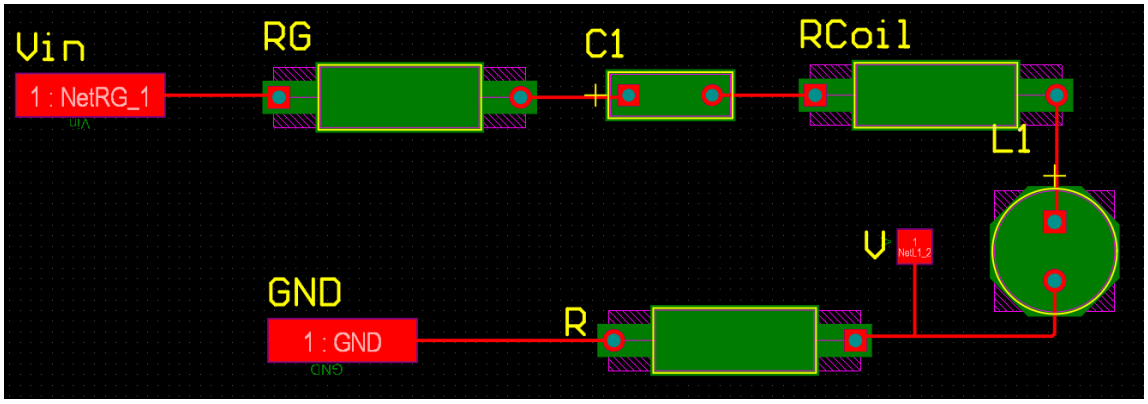

Figure 15: PCB High Q Circuit with R = 47 Ohms

Conclusion:

We began our lab experiment by getting our theoretical values so that we could reference them when measuring. After building the circuit we placed the probe across the resistor and adjusted the frequency till we found the maximum voltage. Once we found the maximum voltage we recorded the frequency and that was our experimental resonance frequency. Then we adjusted the frequency so that the amplitude would be around 0.710 so that we could find our experimental f1 and f2. From these we got our experimental Q. After this, we recorded voltage across the resistor at different frequencies. To measure the voltage across the capacitor and inductor we had to swap them with the position of the resistor. Once done, we repeated these processes with an R-value of 47 instead of 470. Overall, this experiment was very informative and went well with small deviations which could be due to tolerance issues or certain resistances not being exactly as the theory.